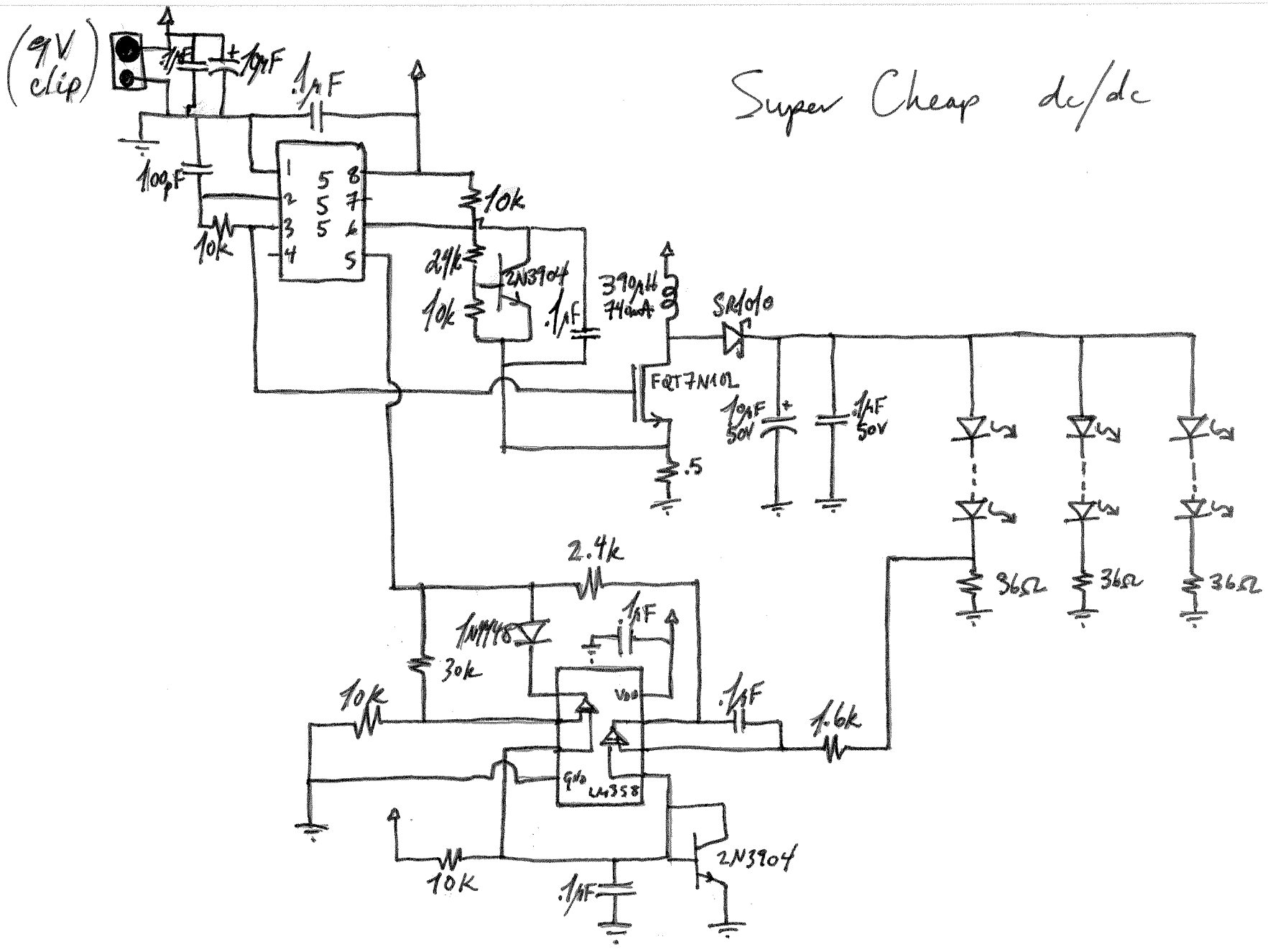

Problem : implement the cheapest possible dc/dc controller

Solution : use a 555 timer — the highest volume IC in history — to implement a peak current controlled, constant off-time converter.

Current loop

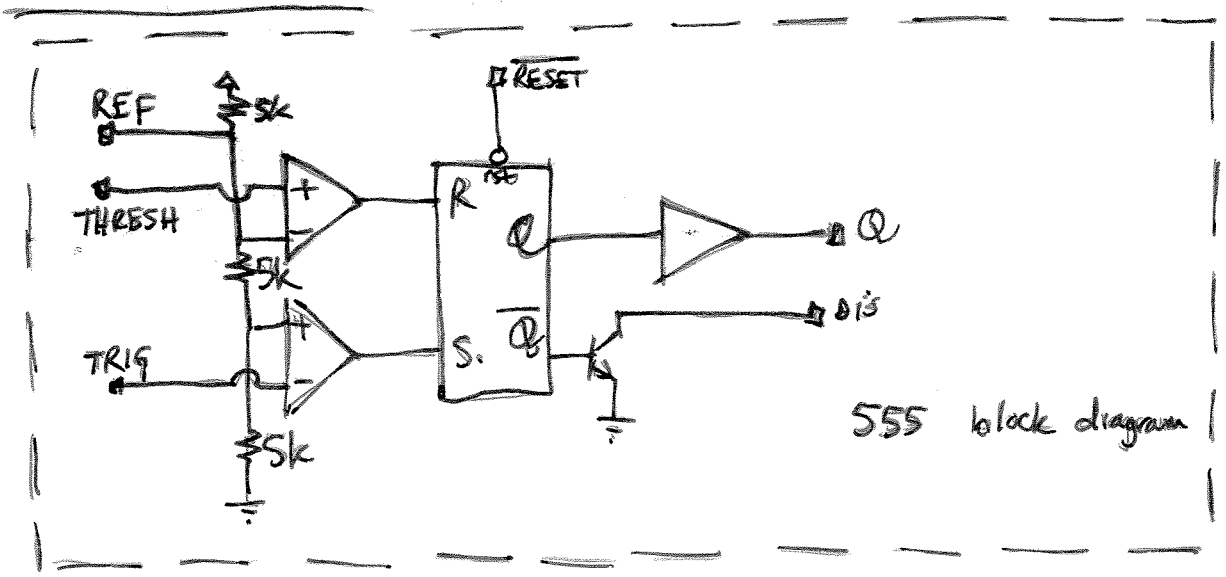

555 block diagram

The 555 timer is insanely high volume and thus incredibly cheap. It also serves as the perfect core for a hysteretic power converter.

The heart of the timer is the set-dominant R-S latch. When the TRIG input falls below REF/2, the output Q goes high and the DIS pin tri-states. When

THRESH exceeds REF, assuming that TRIG is no longer below REF/2 (since the latch is set dominant), the output goes low and the DIS pin is pulled down.

At any time the $\overline{\text{RESET}}$ pin can be pulled low to force the output and DIS pins low.

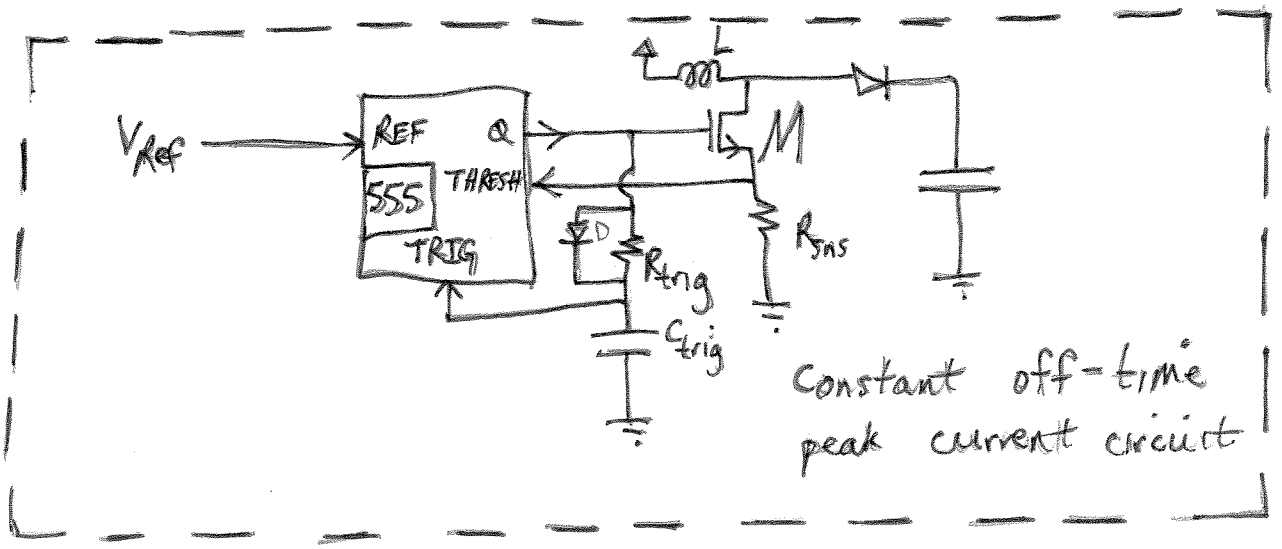

The above circuit turns the transistor M "on" until the voltage across R_{sns} equals V_{ref}. Thereafter, C_{trig} discharges through R_{trig} until the voltage on C_{trig} is below $V_{ref}/2$, at which time the output goes high and C_{trig} charges through D, starting the cycle again.

Note that if $\frac{V_{out}}{V_{in}}$ is great enough that the length of the "on" time is more than about 2x the off time, D is unnecessary because R_{trig} has time to charge C_{trig} during the on time.

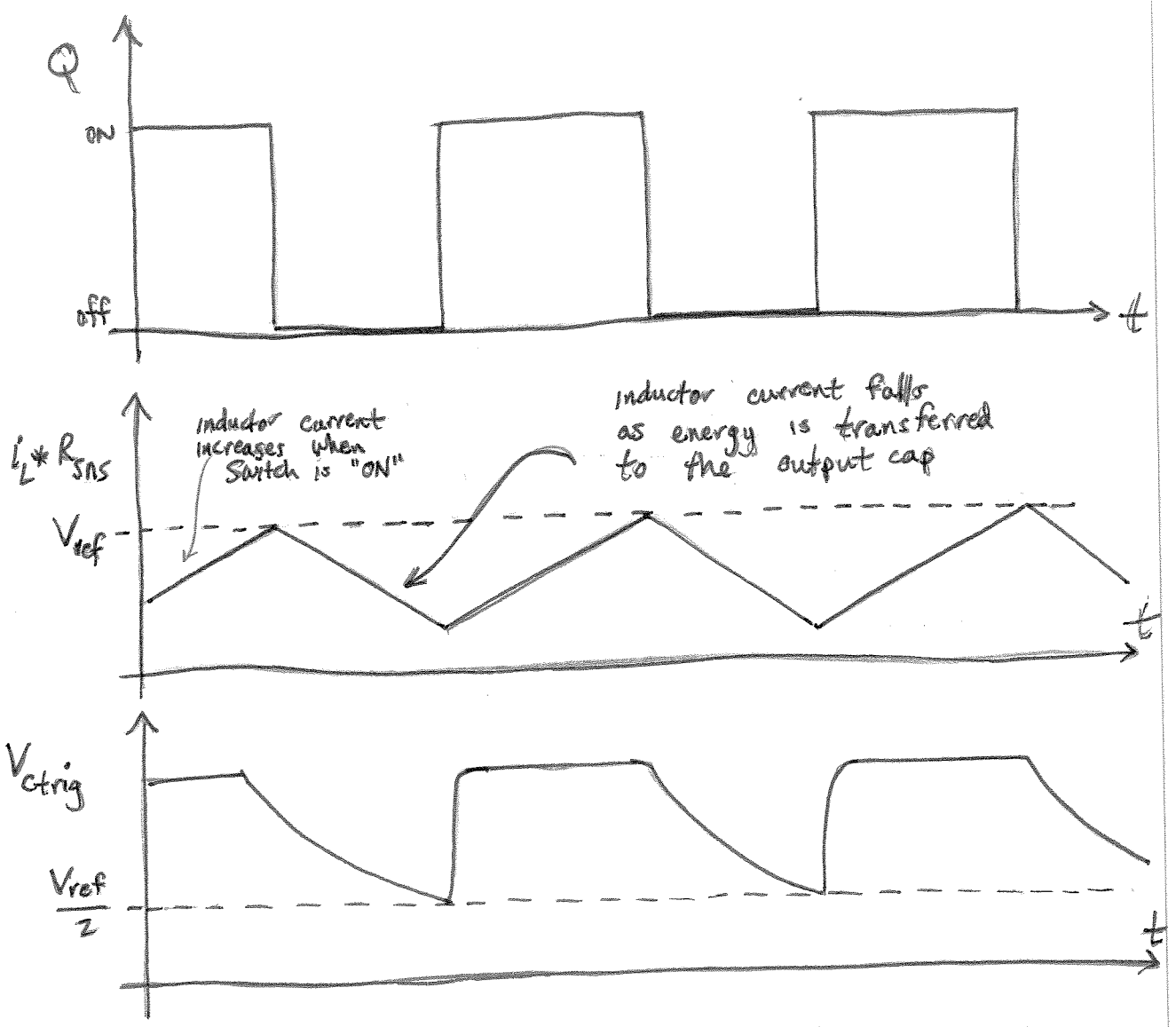

Waveforms of interest

The constant off time aspect of this control method means that the switching frequency changes with input-output voltage ratio. In a boost converter in continuous conduction,

$$\frac{V_{out}}{V_{in}} = \frac{1}{1-D}$$

where D is the ratio of "ON" time to total cycle length.

Rearranging,

$$1 - D = \frac{V_{in}}{V_{out}} = \frac{t_{off}}{T_{sw}}$$

$$f_{sw} = \frac{1}{T_{sw}} = \frac{V_{in}}{V_{out}} \cdot \frac{1}{t_{off}}$$

Now, the exact value of t_{off} as a function of R_{trig} and C_{trig} actually changes somewhat as V_{REF} changes, but a good estimate is that the trigger happens in one time constant, i.e.,

$$f_{sw} \cong \frac{V_{in}}{V_{out}} \cdot \frac{1}{R_{trig} C_{trig}}$$

A final practical consideration in the current loop: the TRIG input on the 555 goes into the base of a PNP; thus, TRIG will work reliably very near ground. THRESH, however, is an NPN (Darlington!) input, and thus probably does not work below 1.3V or so. We could choose an R_{sense} value so that our V_{REF} for expected inductor currents is greater than 1.3V, but this means wasting substantial power in R_{sense}.

Instead, we employ a "floating battery" implemented with a V_{be} multiplier. Consider:

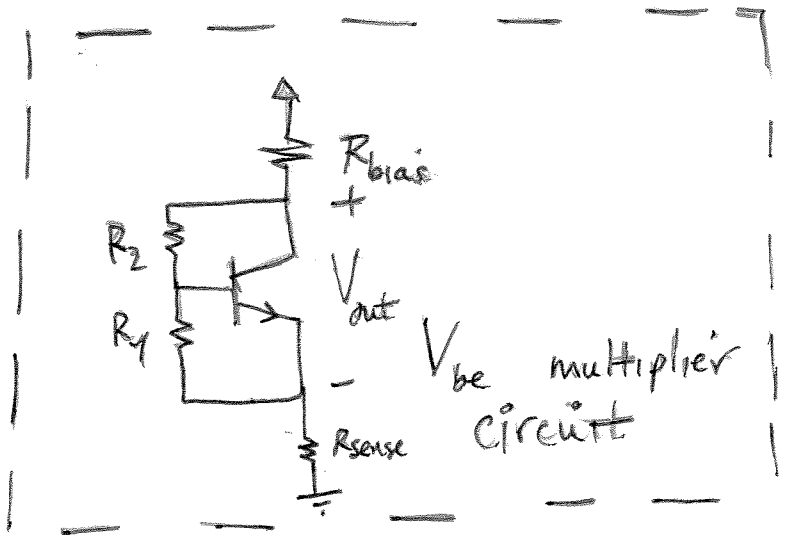

Assuming that the current through R_{bias} is large enough,

Some current leaks through R_1 & R_2. As soon as the voltage across R_1 is sufficient to turn on the transistor, the voltage across R_1 & R_2 (assuming $\beta \to \infty$) are fixed.

$$V_{R_1} = V_{BE}$$

$$I_{R_2} = \frac{V_{BE}}{R_1}$$

$$V_{R_2} = R_2 I_{R_2} = \frac{R_2}{R_1} V_{be}$$

$$\therefore \quad V_{out} = \left(1 + \frac{R_2}{R_1}\right) V_{BE}$$

Using this circuit, we add an offset to V_{sense} while leaking an inconsequential current through R_{sense}.

Voltage loop

Now that we can set the current based on a reference, we need another slower feedback loop to set that reference current to produce the desired output voltage.

Since the dynamics of the current loop are very fast (each cycle the output current goes precisely to the reference; effectively this is a pole at f_{sw}), we can just throw an integrator into our voltage loop to get high DC gain and thus low steady-state error.

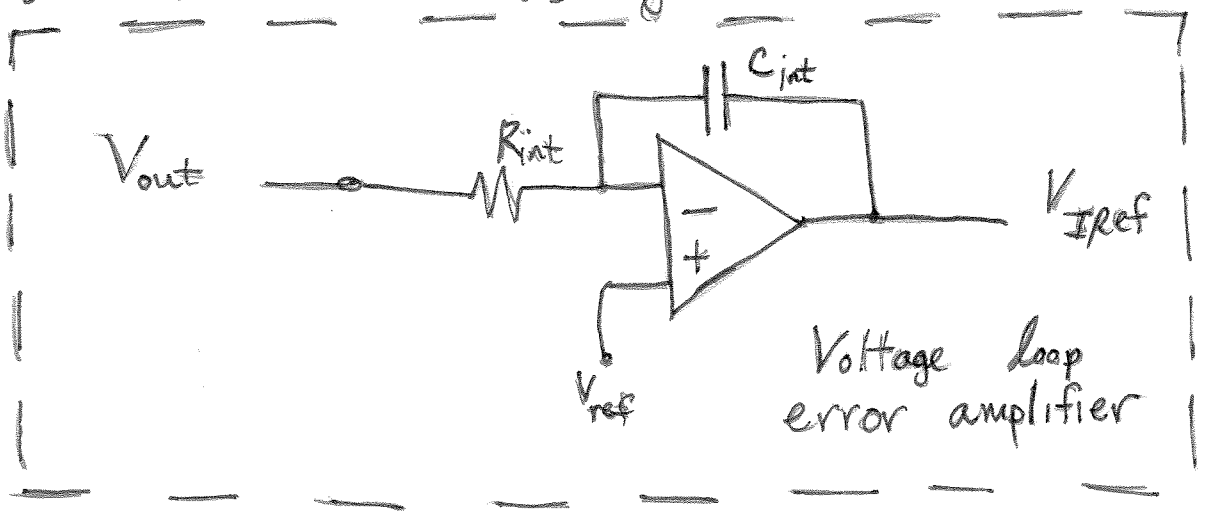

The loop crossover is related to the integrator gain, $\frac{1}{R_{int}C_{int}}$.

I_{ref} Clamp

Because of nonzero $R_{DS,on}$ of the switching transistor, parasitic R of the inductor, and the output resistance of the power source, there is a maximum achievable inductor current, I_{max}. During large transients, if I_{ref} exceeds I_{max}, the current loop latches up. Such transients occur, for example, at startup.

To prevent this, we clamp the maximum I_{ref} to a value less than I_{max}. This guarantees that the circuit always oscillates.

In its simplest form, the clamp can just be another V_{BE} multiplier:

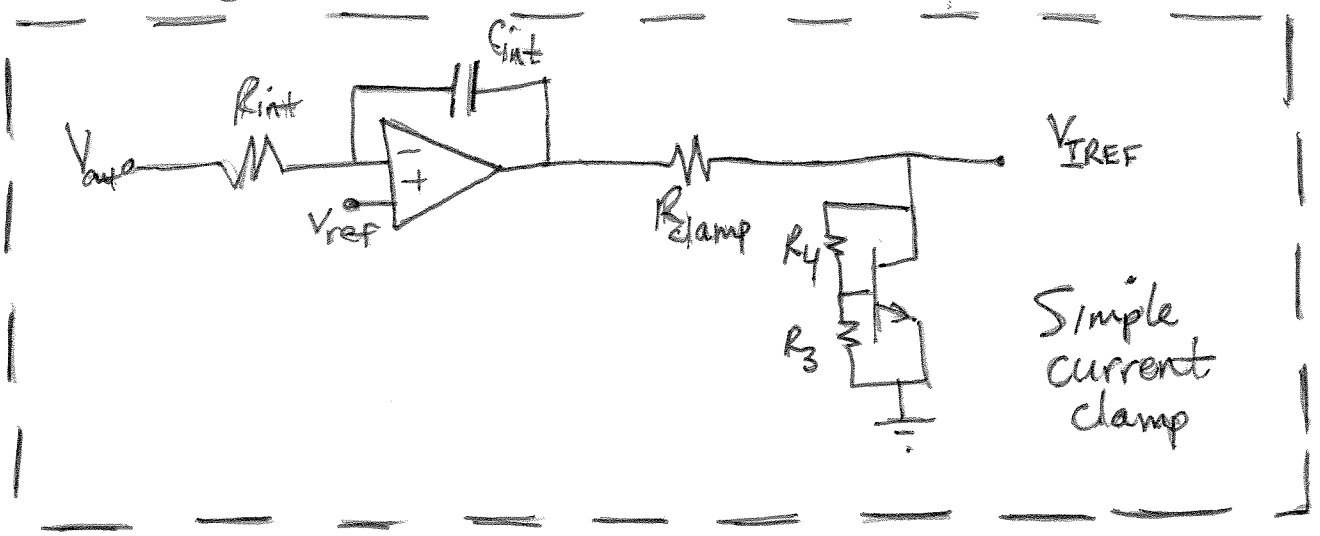

However, this circuit is somewhat impractical because the input impedance of the clamp is rather high, requiring a large R_{clamp}. If the REF input on the 555 were high impedance, this would be acceptable, however, the REF pin looks into the stack of 5kΩ resistors, and thus has an impedance of only 3.3kΩ. If R_{clamp} becomes too large compared to this value, the achievable I_{ref} range becomes limited. In systems with a relatively constant load, this is acceptable, but this circuit can be improved rather easily:

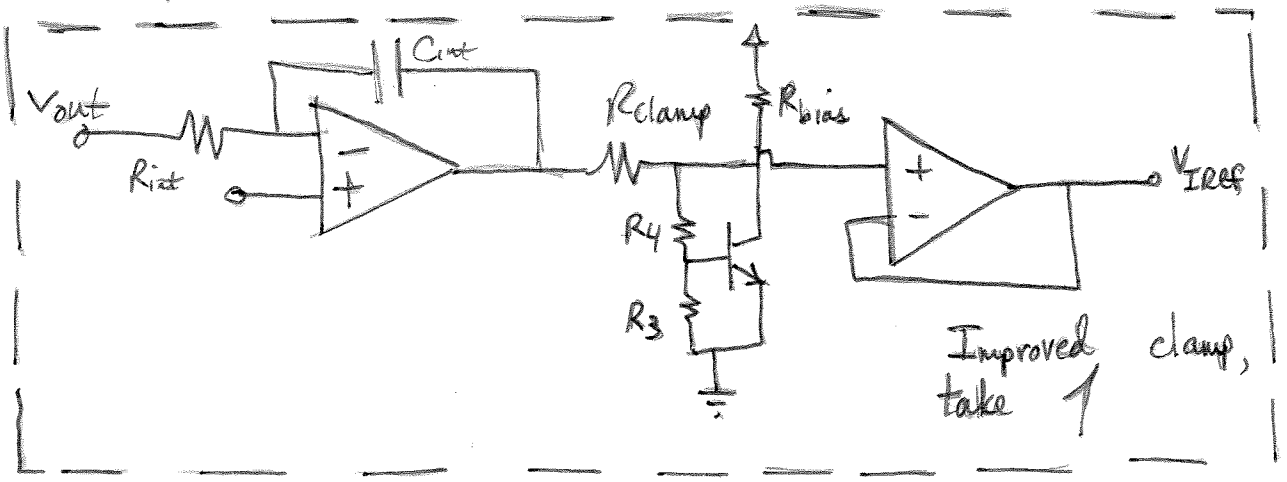

Now we can choose R_{bias} to be rather large and get better control over clamping while retaining I_{ref} range.

However, we can get an even sharper clamping response slightly differently:

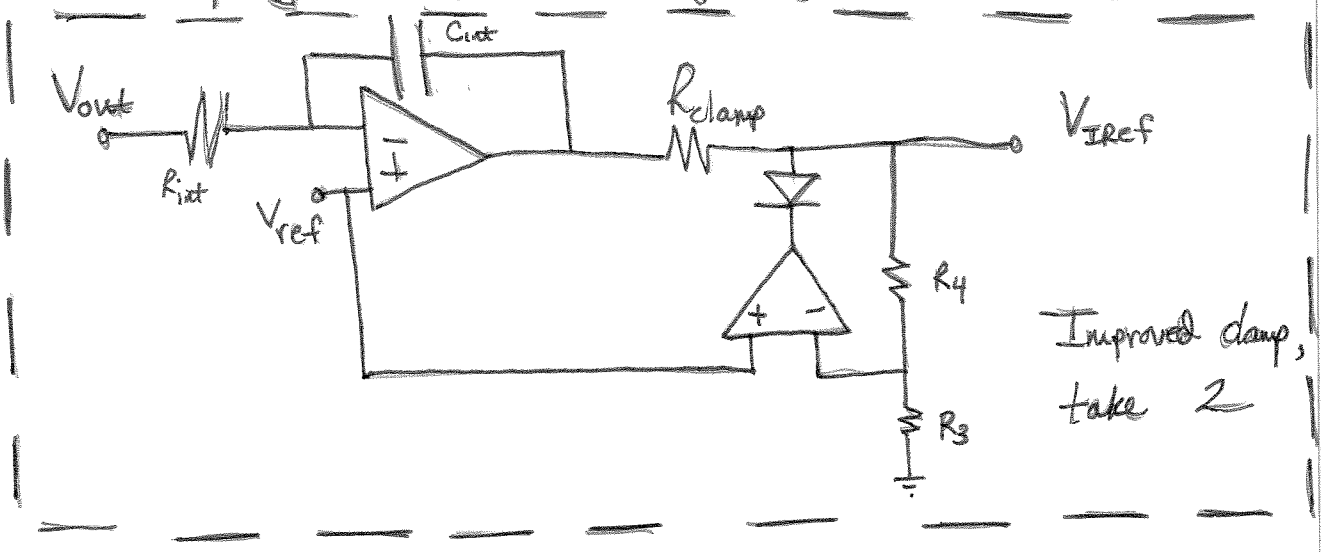

Now, we're still using two op-amps, but our clamp uses the op-amp directly, meaning it has much lower input impedance than the BJT-based one.

LED current control

In this application, we are driving LEDs. Thus, it's really the current we want to control. To do this, we control the voltage across the tail resistor in the LED string, effectively giving us a constant current output.

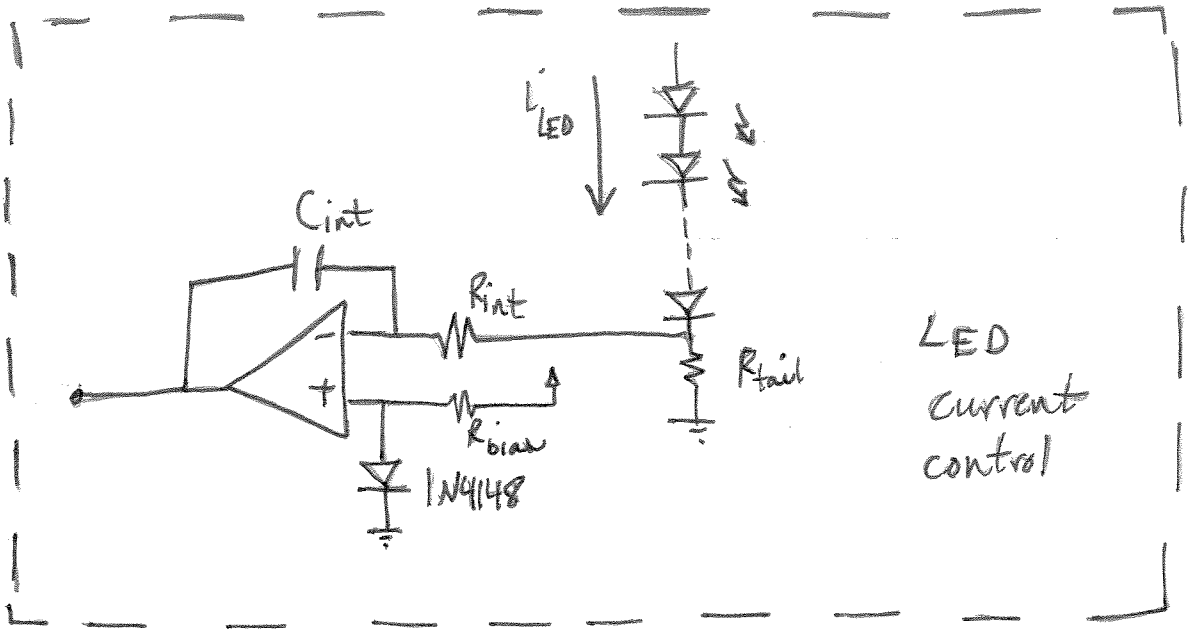

Since $V_{Rtail} = V_{Diode}$, $I_{LED} = \frac{V_{Diode}}{R_{tail}}$.

Practically, this requires an op-amp whose input common-mode range includes the negative supply (unless we want to supply the op-amp with a negative voltage), but fortunately one of the cheapest op-amps obtainable, the LM358, not only has PNP inputs, but is also a dual, giving us the ability to implement an improved current reference clamp for free!

One final consideration: since the clamp current is dependent on the V_{BE} of the THRESH offset generator and on V_{ref}, both are derived from 2N3904s in the hope that this will track somewhat better than, say, a 2N3904 & a 1N4148.